Fully Integrated UWgbi 3682

Technical drawing

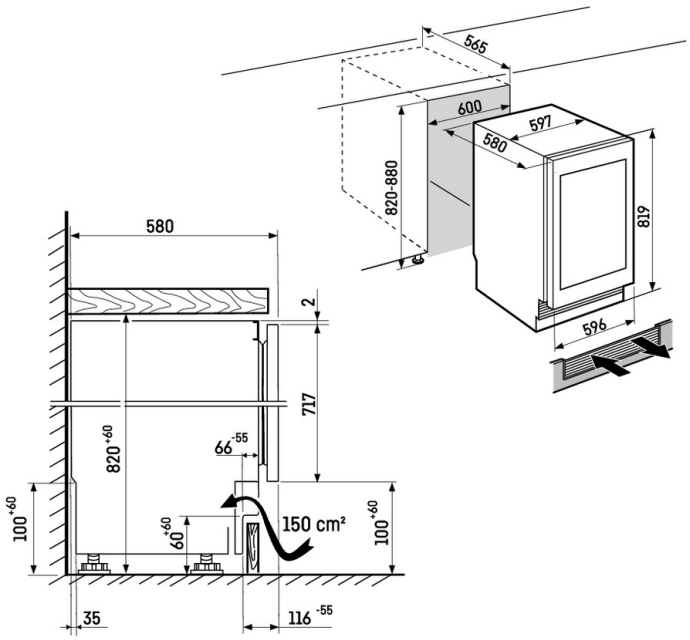

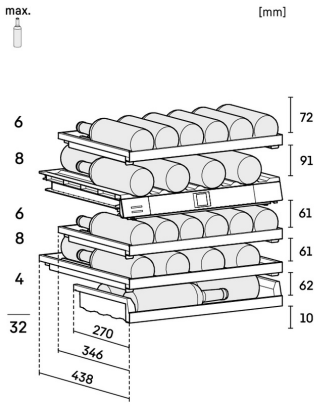

Products and their details are staged for advertising purposes. Whilst every effort is made to ensure all specifications and information in this flyer are accurate, Liebherr reserves the right to make changes without notification. Where actual appliance measurements, specifications, and ratings are crucial, we recommend that the actual appliance installation instructions that accompany each appliance be checked. Liebherr will not be liable for any damage. (07.09.2026)